Parker Nitrogen Generator DN-6

Installation, Operation and Maintenance Manual

Original Language EN

ENGINEERING YOUR SUCCESS.

Retain this user guide for future reference.

Parker Hannifin Corporation
Industrial Gas Filtration and
Generation Division
4087 Walden Ave.
Lancaster, NY
716-686-6400
www.parker.com/igfg

Table of Contents

The latest revision of this document can be downloaded at www.parker.com/gsfregistration.

1 Safety Information

Important: Do not operate this equipment until the safety information and instructions in this user guide have been read and understood by all personnel concerned. Use of the equipment in a manner not specified within this user guide may impair the protection provided by the system and could result in an unplanned release of pressure, which may cause serious personal injury or damage.

Only competent personnel trained, qualified, and approved by Parker Hannifin should perform service and repair procedures.

When handling, installing or operating this equipment, personnel must employ safe engineering practices and observe all related local regulations, health & safety procedures, and legal requirements for safety.

Ensure that the equipment is depressurized and the electrical is disconnected from the supply, prior to carrying out any of the scheduled maintenance instructions specified within this user guide.

Most accidents that occur during the operation and maintenance of machinery are the result of failure to observe basic safety rules and procedures. Accidents can be avoided by recognizing that any machinery is potentially hazardous.

Parker Hannifin can not anticipate every possible circumstance which may represent a potential hazard. The warnings in this manual cover the most known potential hazards, but by definition can not be all-inclusive. If the user employs an operating procedure, item of equipment or a method of working which is not specifically recommended by Parker Hannifin the user must ensure that the equipment will not be damaged or become hazardous to persons or property.

The system produces a flow of nitrogen and oxygen gases, which quickly disperses in the atmosphere. Nitrogen is not a poisonous gas but, in a concentrated form, there is a risk of asphyxiation. Do not directly inhale the output gas from the outlet pipe.

The system is classified as non-hazardous for transportation purposes and as non-flammable for fire regulations. Any fire should be fought by means appropriate to the material causing the fire with the exception being the use of water.

Note: Any interference with the calibration warning labels will invalidate the gas system's warranty and may incur costs for the re-calibration of the gas system.

This equipment is for indoor use only. Do not operate outdoors.

Parker Hannifin Corporation
Industrial Gas Filtration and
Generation Division
4087 Walden Ave.
Lancaster, NY
716-686-6400
www.parker.com/igfg

1.1 Markings and symbols

The following markings and international symbols are used on the equipment and within this user guide:

	Caution, Read the User Guide.	Warning	Highlights actions or procedures which, if not performed correctly, could lead to electric shock.
Warning	Highlights actions or procedures which, if not performed correctly, may lead to personal injury or death.		When disposing products for end of life including electronic parts and assemblies, follow local waste disposal regulations.
Caution	Highlights actions or procedures which, if not performed correctly, may lead to damage to this product.		Highlights information relevant to an operating procedure or process.

DANGER DISCONNECT THE MAINS SUPPLY BEFORE REMOVING THIS COVER	DANGER Disconnect the mains supply before removing this cover.
NITROGEN (N2) DO NOT BREATHE Asphyxiant in high concentrations. No odour Slightly lighter than air. Ensure adequate ventilation. Breathing 100% nitrogen will produce immediate unconsciousness and death due to lack of oxygen. NON-FLAMMABLE COMPRESSED GAS MAX PRESSURE 160 psig (11 barg) USE ONLY WITH EQUIPMENT COMPATIBLE WITH THIS PRESSURE	**NITROGEN (N2)** DO NOT BREATHE Asphyxiant in high concentrations. No odor. Slightly lighter than air. Ensure adequate ventilation. Breathing 100% nitrogen will eventually cause unconsciousness and could lead to death due to lack of oxygen. NON-FLAMMABLE COMPRESSED GAS MAX PRESSURE 160 psig (11 barg) Use only with equipment compatible with this pressure.

Parker Hannifin Corporation
Industrial Gas Filtration and
Generation Division
4087 Walden Ave.
Lancaster, NY
716-686-6400
www.parker.com/igfg

2 Description

The Parker Nitrogen Generator is designed to provide a constant supply of nitrogen gas, at a pre-selected purity, flow, and pressure, as specified in section 2.1 below.

The system uses proven Pressure Swing Adsorption (PSA) technology with a Carbon Molecular Sieve (CMS) to separate nitrogen (N_2) from the atmosphere and store it at a high purity level.

This user guide contains all of the information necessary for the correct use of the Parker Nitrogen Generator range. Should you have any questions regarding the safe and correct installation, operation or maintenance of the generator, contact the supplier before proceeding.

This specification is valid when the equipment is located, installed, operated, and maintained as specified within this user guide.

2.1 Technical Specification

Performance Specifications		**Model**			
	Units	**DN-6JA-100**	**DN-6NA**	**DN-6WD**	**DN-6CHN**
Outlet flow	SCFH (l/min)	6 (2.8)	6 (2.8)	6 (2.8)	6 (2.8)
Maximum outlet pressure	psig (barg) [kPa]	85 (5.9) [586]	85 (5.9) [586]	85 (5.9) [586]	85 (5.9) [586]
Mechanical connections					
Nitrogen Outlet	**Nitrogen Out**	CPC 1800 (1/4” tubing barb valve inline coupling)			
Electrical Specifications					
Connection Type		IEC320	IEC320	IEC320	IEC320
Supply Voltage Range *	VAC	100V 1 phase + PE 50/60Hz	120V 1 phase + PE 60Hz	230V 1 phase + PE 50/60Hz	230V 1 phase + PE 50/60Hz
Supply Voltage Fluctuation		± 10%	± 10%	± 10%	± 10%
Current	A	6	6	3	3
Fuse	A	10 *((T), 10A, 250v)*	10 *((T), 10A, 250v)*	10 *((T), 5A, 250v)*	10 *((T), 5A, 250v)*
Cordset		Included	Included	*	Included

*Ordered seperately (see chart on the bottom of page 7).

Parker Hannifin Corporation
Industrial Gas Filtration and
Generation Division
4087 Walden Ave.
Lancaster, NY
716-686-6400
www.parker.com/igfg

Environmental Specifications		
Ambient Temperature	ºF (ºC)	36 – 95 (2 – 35)
Maximum Humidity		(80% MAX ≤ 31°C)
IP Rating		IP20
Pollution Degree		2
Installation Category		II
Altitude	ft (m)	< 6562 (< 2000)
Noise	dB(A)	<65
Weight		
Shipping weight (single unit)	Lbs (kgs)	171 (78)
Product	Lbs (kgs)	107 (49)

Regulatory Certifications				
Model	DN-6NA	DN-6WD	DN-6JA-100	DN-6CHN
UL Certification Standard	UL61010-1 3rd Edition UL61010-2-201 1st Edition	UL61010-1 3rd Edition UL61010-2-201 1st Edition	UL61010-1 3rd Edition UL61010-2-201 1st Edition	UL61010-1 3rd Edition UL61010-2-201 1st Edition
IEC Certification Standard	IEC61010-1:2010, MOD	IEC61010-1:2010, MOD	IEC61010-1:2010, MOD	IEC61010-1:2010, MOD
CSA Certification Standard	CAN/CSA C22.2 No. 61010-1-12 CAN/CSA-IEC 61010-2-201:14	CAN/CSA C22.2 No. 61010-1-12 CAN/CSA-IEC 61010-2-201:14	CAN/CSA C22.2 No. 61010-1-12 CAN/CSA-IEC 61010-2-201:14	CAN/CSA C22.2 No. 61010-1-12 CAN/CSA-IEC 61010-2-201:14
CB Certification	DK-65436-UL	DK-65436-UL	DK-65436-UL	DK-65436-UL
S. Korean EMC Test	-	EMI7053.17	-	-
EMC Standard	FCC Part 15 Subpart B	EN61326-1: 2013 CISPR-11: 2015, Class B	EN61326-1: 2013 CISPR-11: 2015, Class B	EN61326-1: 2013 CISPR-11: 2015, Class B
NSF Certification Standard	NSF/ANSI Standard 18	NSF/ANSI Standard 18	NSF/ANSI Standard 18	NSF/ANSI Standard 18

***Ordered Seperately**

Country/Territory	Electric Cordset (with Plug)
Australia	13412AU
Brunei	13412UK
Cambodia	13412UK
Europe	13412EU
Hong Kong	13412UK
India	13412IND
Indonesia	13412EU
Malaysia	13412UK
New Zealand	13412AU
Philippines	13412
Singapore	13412UK
South Korea	A03-0461
Thailand	A03-0469
UK	13412UK
Vietnam	13412EU

Parker Hannifin Corporation
Industrial Gas Filtration and
Generation Division
4087 Walden Ave.
Lancaster, NY
716-686-6400
www.parker.com/igfg

2.1.1 Dimensions

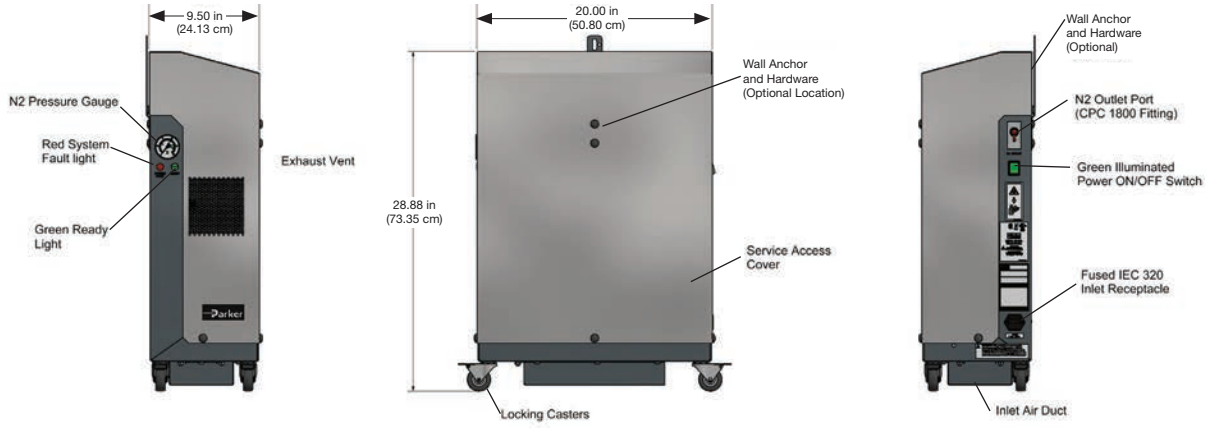

Figure 1: System Features and Dimensions

2.2 Unpacking the equipment

Warning **This system is heavy. Be careful in removing the system from the packaging set.**

Remove the equipment from its packaging. Check system was not damaged in transit. Verify that the installation kit is included with your equipment. Installation kit includes:

- CPC female NSF fitting
- Operator Quick Start guide

Description	P/N	Qty
Installation Kit	B04-0690	1

If any items are missing or damaged, please contact your Parker representative.

2.2.1 (Optional) Wall Anchor Bracket Kit

Remove the equipment from its packaging. Check system was not damaged in transit. Verify that the installation kit is included with your equipment. Installation kit includes:

- Wall anchor bracket
- ¼ in turn fastener
- CPC female NSF fitting
- Decorative screw caps and cap removal tool

Description	P/N	Qty
Wall Anchor Bracket Kit	B04-0691	1

If any items are missing or damaged, please contact your Parker representative.

Parker Hannifin Corporation
Industrial Gas Filtration and
Generation Division
4087 Walden Ave.
Lancaster, NY
716-686-6400
www.parker.com/igfg

3 Installation & Commissioning

Warning Do not install this equipment until the following instructions have been read and understood by all personnel concerned. Minimize the risk of siphoning by installing a check valve between the system and the source.

Caution Before continuing with the installation and commissioning of this equipment ensure that the tubing is correctly sized for the pressure and application and that the electrical supply voltage and frequency meet the requirements detailed within this specification and on the equipment rating plate.

3.1 Recommended System Layout

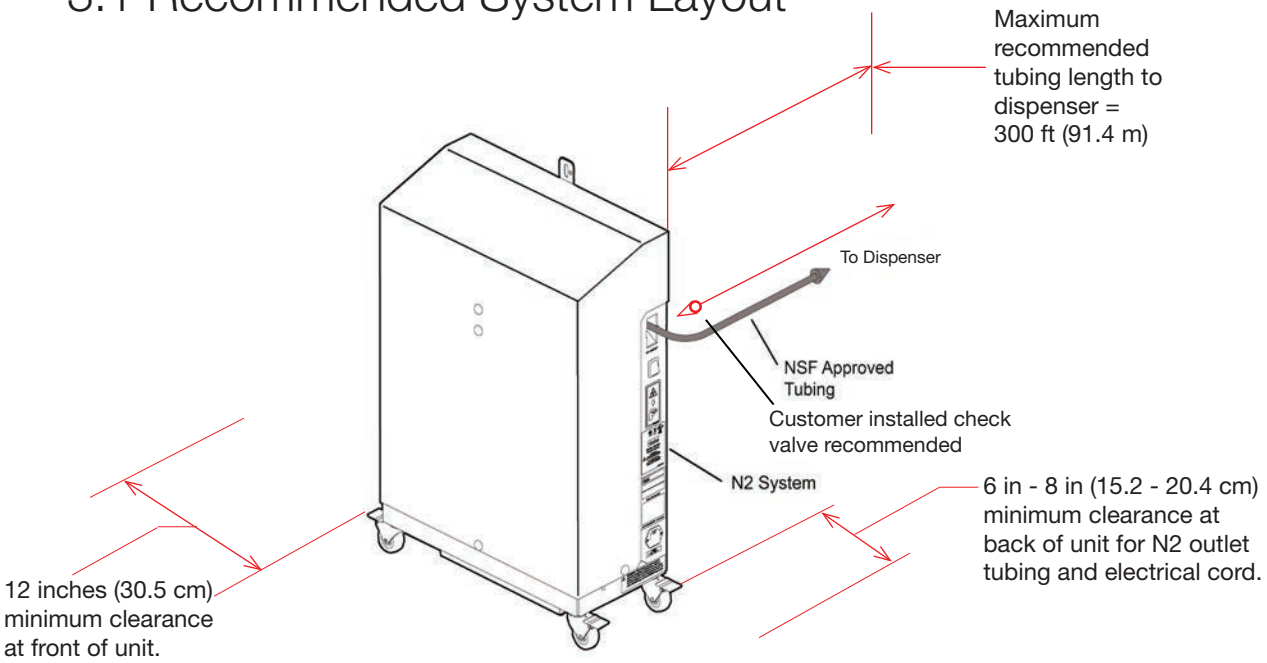

Figure 2: Recommended System Layout

Parker Hannifin Corporation
Industrial Gas Filtration and Generation Division
4087 Walden Ave.
Lancaster, NY
716-686-6400
www.parker.com/igfg

3.2 Installation of the System

The system should be located indoors on a flat surface, and be protected from direct sunlight, moisture, and dust (Refer to section 2.1 of this user guide for the system's environmental specification). When considering the final location of the system ensure that:

- The system is positioned within easy access of the electrical supply.
- There is adequate space available around the system for ventilation, maintenance access.
- Casters are locked when system is in position.
- The tubing is NSF ¼ in (.63 cm) with 150 psig (10.3 bar) pressure rating.
- Max length of tubing: 300 ft (91.4 m).
- Clearance: Top, bottom, left and right sides: None. Back 6 - 8 inches (15.2 cm - 20.3 cm) to allow clearance for tubing and power cord, Front: Minimum 12 in (30.5 cm) to allow for ventilation.

DO NOT

- Position the system so that it is difficult to operate or disconnect from the electrical supply.
- Position the system directly above electrical equipment as condensate may collect at the base of the system.
- Use noxious chemicals or machinery that produces fumes within a 20 ft (6 m) radius of the system.

Warning

Due to the nature of operation, there is a possibility of oxygen enrichment surrounding the system. Ensure that the area is adequately ventilated. Where the risk of oxygen enrichment is high, such as a confined space or poorly ventilated room, the use of oxygen monitoring equipment is advisable.

The DN-6 Series is capable of delivering nitrogen at a flow rate of 6 SCFH (2.8 lpm). Nitrogen is not a poisonous gas but, in a concentrated form, there is a risk of asphyxiation. If the system is operated within a confined space ensure that adequate ventilation and oxygen monitoring equipment is fitted.

Parker Hannifin Corporation
Industrial Gas Filtration and
Generation Division
4087 Walden Ave.
Lancaster, NY
716-686-6400
www.parker.com/igfg

3.2.1 Anchoring the System to the Wall

Warning **Ensure that the wall is capable of supporting the system. Refer to section 2.1 for weights and dimensions.**

The system may be attached to the wall using the optional anchor bracket. Mark a point on the wall at a height along which the upper mounting holes of the system will be located.

Roll the system up to the wall and use the supplied hardware to attach the anchor bracket onto the wall.

3.3 Electrical Installation

Attach the supplied cordset to the IEC 320 socket and connect the cordset to the electrical outlet.

If a cordset other than the one provided is used to connect the equipment to the electrical supply, ensure that it is suitably rated for the application and in accordance with local and national code regulations.

Warning **The equipment must be connected to earth (grounded) through the cordset.**

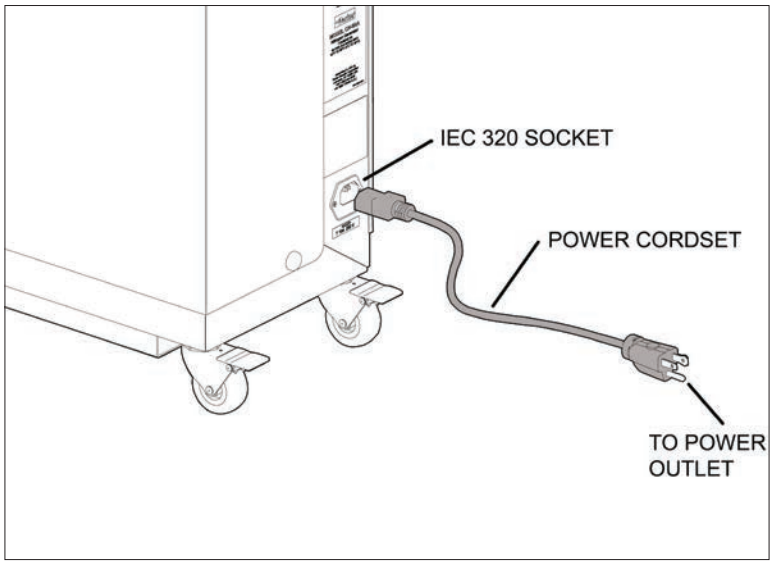

Figure 3: Recommended installation of IEC320 socket to power source.

Parker Hannifin Corporation
Industrial Gas Filtration and
Generation Division
4087 Walden Ave.
Lancaster, NY
716-686-6400
www.parker.com/igfg

4 Operating the equipment

4.1 Starting the equipment

1. Install the equipment at the desired location and plug the electrical cord into a properly grounded electrical outlet.

2. Press the power switch ON (symbol “I” illuminates green) located at the rear of the unit to start the system. DO NOT CONNECT THE DOWNSTREAM EQUIPMENT YET. The cooling fans will start immediately and after approximately 2 minutes the on-board compressor will start.

3. Initially, the RED, ”SYSTEM FAULT” light on the front panel will illuminate because the internal nitrogen storage tanks are empty. Allow the system to operate normally until the pressure gauge displays a pressure within the GREEN range (75-85 psig (5.1-5.9 barg)) and the GREEN “READY” light illuminates (6-8 minutes). The RED, ”SYSTEM FAULT” light will go off.

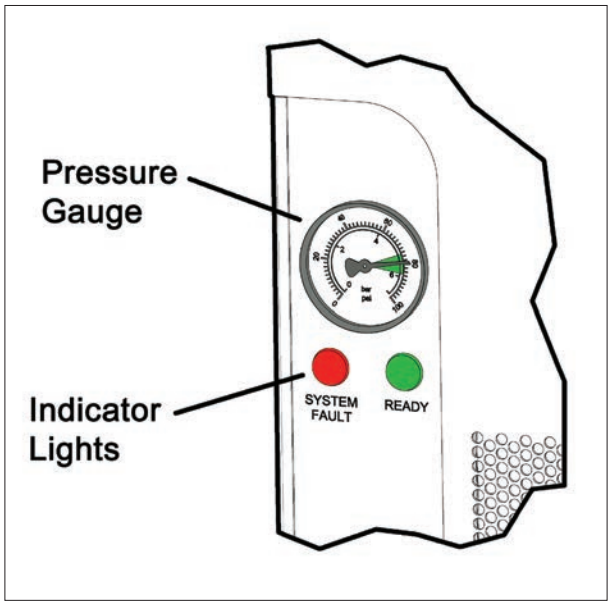

Figure 4: N2 Pressure Gauge and Indicator Lights.

Parker Hannifin Corporation
Industrial Gas Filtration and
Generation Division
4087 Walden Ave.
Lancaster, NY
716-686-6400
www.parker.com/igfg

4. The compressor will continue to cycle on and off about every 2 minutes until the internal nitrogen storage tanks are fully pressurized.

5. With no nitrogen being withdrawn from the output fitting, the system should go into standby mode within a short time and the cooling fans will stop. Allow the system to sit for an additional 15-20 minutes before connecting any output tubing. During this time the compressor should not operate. If the compressor operates during this time, it may indicate an internal system leak.

6. Connect the tubing barb valve coupling to the downstream tubing. Then connect that coupling to the Nitrogen Outlet Port coupling on the back of the system. Make sure that the downstream tubing has a check valve (not supplied) to prevent back-flow. Refer to section 3.1 for recommended installation diagram.

7. Nitrogen will immediately begin pressurizing the dispensing system to approximately 80 psig (factory preset), and the system should come out of standby mode, as indicated by the operation of the cooling fans. If the internal tanks are de-pressurized sufficiently, the compressor will begin to cycle on and off to re-pressurize the internal storage tanks.

8. The system should now be ready for supplying nitrogen and will maintain approximately 80 psig output pressure as nitrogen is withdrawn from the system.

9. If the RED, ”SYSTEM FAULT” light comes on during use, it may: (1) indicate a gas leak in the dispensing system causing an excess of nitrogen to be withdrawn from the system or (2) indicate an over-temperature condition in the system caused by insufficient cooling air flow. This could be caused by debris blocking the inlet duct at the bottom-rear of the unit next to the floor, or an obstruction of the exhaust vent located at the front of the unit.

   Refer to Section 2.1 Technical Specifications for ambient temperature specifications.

The nitrogen generation process will consist of a compressor run sequence followed immediately by an exhaust sequence. These cycle times vary depending upon the model of generator as shown below. An audible pressure release will indicate that the unit is producing nitrogen.

Model	Compressor Run Time (Seconds)	Exhaust Time (Seconds)
DN-6 Series	130	120

The system will initially take 15-30 minutes to fully pressurize the internal storage tanks with no nitrogen being withdrawn from the system.

The system is designed to run continuously and requires no further intervention, other than regular scheduled maintenance. (See Section 5 for maintenance instructions).

Parker Hannifin Corporation
Industrial Gas Filtration and
Generation Division
4087 Walden Ave.
Lancaster, NY
716-686-6400
www.parker.com/igfg

Standby Mode

In the event of zero flow, the system cycle will continue until the internal tanks are fully pressurized whereupon it will enter standby mode. In standby mode, the unit will cease cycling and the fans will turn off. When the nitrogen pressure falls below a predetermined set point the unit will re-enter normal operation and the cooling fans will start, followed by cycling of the compressor.

4.2 Shutting Down the System

1. Push the power switch to the “OFF” position (O) and ensure that the green illumination of the switch is off.

Warning

Make sure that the power cord is unplugged before performing any maintenance and service. Failure to do so may result in electrical shock or serious injury.

Caution

The generator will remain pressurized after shut down. Before performing any maintenance or opening any piping systems, always depressurize the system. Failure to do so may result in injuries.

4.3 Depressurizing the System

Follow this procedure to depressurize the system before performing any maintenance or service.

1. Push the power switch to the ‘OFF’ position (O) and unplug the cord set.
2. Remove the system’s cover to access internal components.
3. Loosen the bleed screw (See Figure 5) by turning counter-clockwise by hand, 2-3 turns until gas can be heard escaping.
4. Allow the system to de-pressurize until the pressure gauge on the front of the unit indicates zero pressure.
5. Once the system is relieved of pressure, re-tighten the bleed screw by turning clockwise while the system is depressurized.

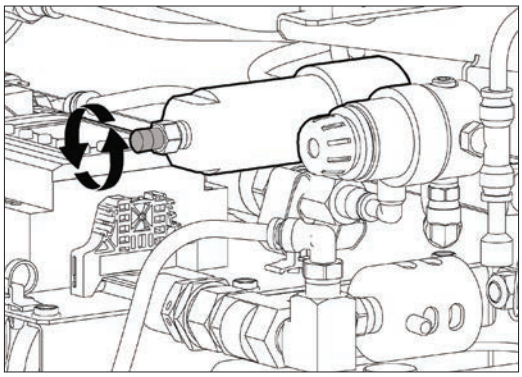

Figure 5: Bleed Screw

Parker Hannifin Corporation
Industrial Gas Filtration and
Generation Division
4087 Walden Ave.
Lancaster, NY
716-686-6400
www.parker.com/igfg

5 Maintenance

Warning **It is essential that the system is powered down and fully depressurized before carrying out any servicing procedures (Refer to sections 4.2 and 4.3)**

The quality and reliability of the system is maintained through preventative maintenance performed on a scheduled, regular basis. Although the frequency of this maintenance is determined by particular use conditions, it is recommended that filter elements are changed at least every twelve months.

5.1 Cleaning

5.1.1 Exterior

Clean the system with a damp cloth only and avoid excessive moisture around any electrical components. If required you may use a mild detergent, however do not use abrasives or solvents as they may damage the warning labels on the equipment.

5.1.2 Internal

It is highly recommended that an internal inspection of the unit be performed after the first 6 months of operation following installation. One of the main purposes of this inspection is to check the hour meter on the PLC. See section 5.4.5 for accessing the hour meter on the PLC. Access and record the number of RUN hours and ECO hours for the unit operation as shown on the PLC display. In general, the number of ECO hours should be many times that of the RUN hours (for example, for 1 year of operation, 400-600 hours of RUN time, and 8000 hours or more of ECO time would be considered normal). The number of ECO hours should be ten to fifteen times that of the number of RUN hours for a leak tight system. If the number of ECO hours is only two or three times the number of RUN hours, this indicates that the system likely has nitrogen leaks either internally or externally causing the compressor to operate excessively and reducing the life of the system. With a high number of RUN hours, the system's replacement filters will need to be changed out more frequently in order to maintain optimum system performance and reduce the chances of further system damage.

To check for internal leaks, the nitrogen outlet tubing can be disconnected from the generator and the compressor operation monitored. With the outlet tubing disconnected, if the compressor operates more than once per hour, then internal leaks are likely and leak test solution (soap + water) can be used to isolate internal leaks. If the compressor does not operate with the outlet tubing disconnected, and there are a high number of RUN hours, then leaks in the coffee dispense system are likely (keg o-rings, etc). Find and repair any dispense system nitrogen leaks to minimize the number of RUN hours of compressor operation. Re-connect nitrogen output tubing once internal system leaks are checked and repaired if necessary.

With the cover removed, vacuum any excessive dirt and dust from the air intake duct area, exhaust screen, and check coalescing filter for debris. Replace any filters if necessary, especially the coalescing and compressor air intake filter if an excessive number of run hours are observed.

5.2 Service Intervals

Maintenance Operations	6 Months	12 Months	36 Months or 5000 Hours
Remove cover and inspect internals of unit. Check compressor RUN and ECO hours on PLC (see section 5.4.5)			
Remove dust and debris from air intake, exhaust vent and other internal sections as required. Replace specific filter elements if needed.			
Ensure system “ready” light is illuminated.			
Check that the exhaust valve is discharging, as described in section 4.1			
Ensure “system fault” light is not illuminated. Internal or External leaks will prevent the system from operating at peak performance and may lead to premature compressor failure. (See Section 6.0 for leak troubleshooting procedures)			
Check that the pressure gauge is between 75 and 85 psi (517-586 kPa) during normal operation.			
Check the condition of the electrical supply cables.			
Ensure there is adequate ventilation clearance around the generator. Remove dust and debris from air intake, exhaust vent and other internal sections as required.			
Filter Element Replacement **Recommended Service A**			
Compressor Replacement **Recommended Service B**			
Exhaust Valve Replacement **Recommended Service C**			

Key:

Check

Essential Procedure

Parker Hannifin Corporation
Industrial Gas Filtration and Generation Division
4087 Walden Ave.
Lancaster, NY
716-686-6400
www.parker.com/igfg

5.3 Service Items

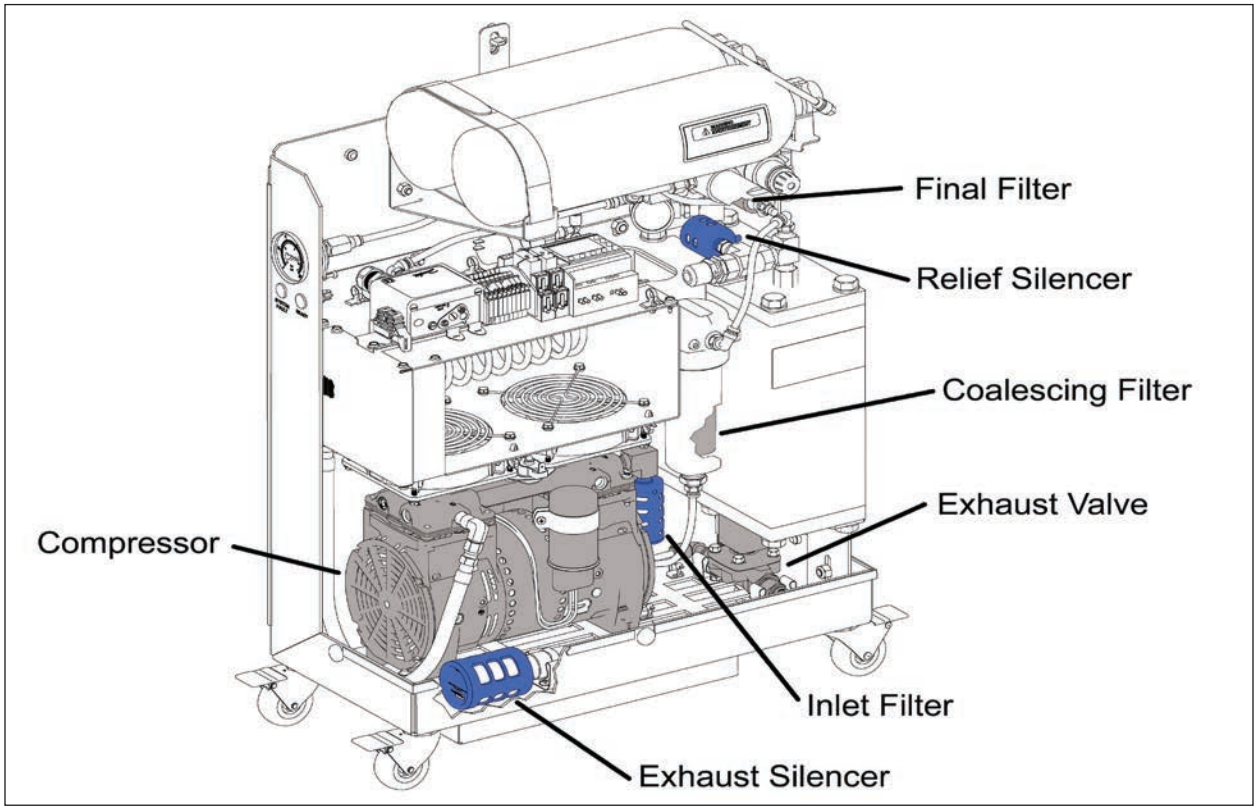

Figure 6: Replacement Parts

Service Kit	Interval	Description	P/N			
			DN-6NA	DN-6JA-100	DN-6WD	DN-6CHN
A	12 months	Filter Kit	MKCN-6	MKCN-6	MKCN-6	MKCN-6
B	36 months or 5000 running hrs.	Compressor Replacement	B04-0647	B04-0647	B04-0648	B04-0648
C	36 months or 5000 running hrs.	Exhaust Valve Replacement	B04-0664	B04-0664	B04-0665	B04-0665

Parker Hannifin Corporation
Industrial Gas Filtration and
Generation Division
4087 Walden Ave.
Lancaster, NY
716-686-6400
www.parker.com/igfg

5.4 Annual Filter Service Requirement

Note: Follow depressurize instruction before any maintenance and disconnect the power plug from the wall outlet.

5.4.1 Filter Replacement

Filter Replacement: Inlet Filter, Exhaust Silencer and Relief Silencer.

1. For the Inlet Filter and Relief Silencer unscrew counter-clockwise to remove the filter. Replace with a new filter by turning clock wise.

2. For the Exhaust Silencer, disconnect the silencer assembly from the tubing and replace with a new silencer assembly.

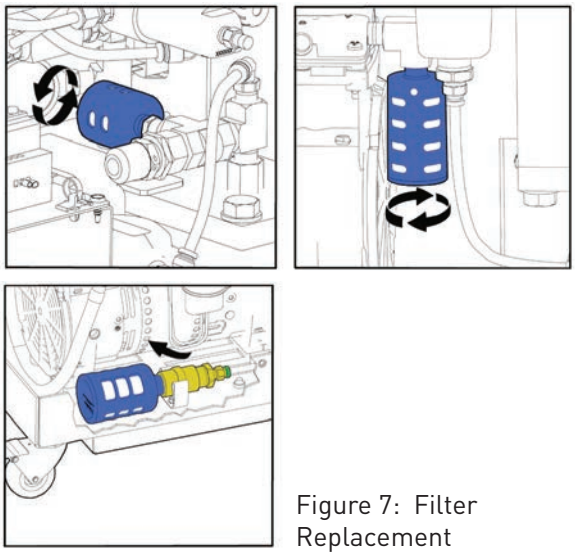

Figure 7: Filter Replacement

Coalescing Filter Replacement

1. Ensure that the internal pressure is completely relieved.

2. Unscrew the bowl counter-clock wise from the head and remove the element from the bowl.

3. Carefully remove the replacement element from its packaging and insert it into the bowl. Ensure that the element fits correctly into the guides provided in the bowl.

4. Refit the bowl to the head ensuring that the locking detail on the head and bowl are lined up when hand tight.

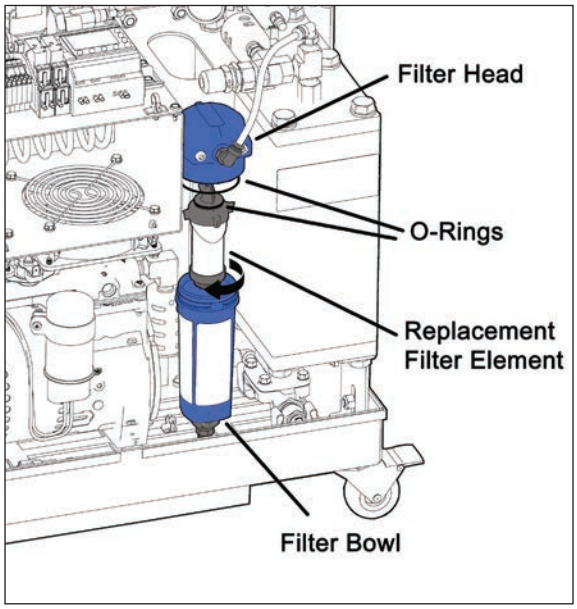

Figure 8: Coalescing Filter Replacement

Parker Hannifin Corporation
Industrial Gas Filtration and
Generation Division
4087 Walden Ave.
Lancaster, NY
716-686-6400
www.parker.com/igfg

Final Filter Replacement

1. Ensure that the internal pressure is completely relieved.

2. Unscrew the filter bowl from the head and remove the filter element.

3. Carefully remove the replacement filter element from its packaging and gently slide it over the support core.

4. Refit the bowl to the head ensuring that the O-ring properly seated and tighten bowl with wrench.

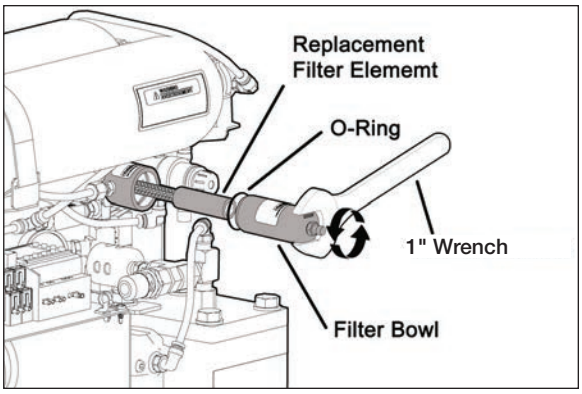

Figure 9: Final Filter Element Replacement

5.4.2 Exhaust Valve Replacement

1. Pull valve from clips for easier access.

2. Disconnect tubing from the quick connect fitting at both ends of solenoid valve.

3. Disconnect the DIN plug on to the solenoid valve by removing the center screw.

4. Follow steps 3, 2, 1 in reverse to install the replacement exhaust valve.

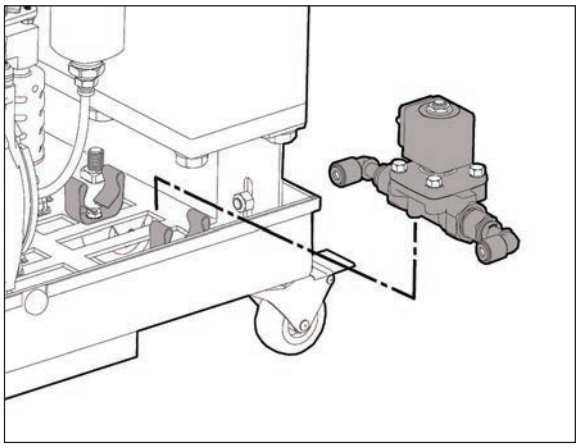

Figure 10: Exhaust Valve Replacement

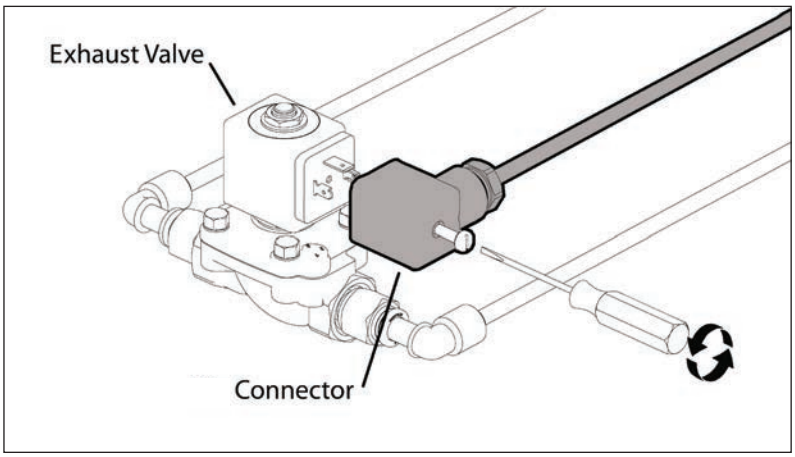

Figure 11: DIN Removal

Parker Hannifin Corporation
Industrial Gas Filtration and
Generation Division
4087 Walden Ave.
Lancaster, NY
716-686-6400
www.parker.com/igfg

5.4.3 Compressor Replacement

1. Disconnect the braided tubing from the compressor by loosening the nut using two wrenches, paying careful attention not to twist or damage the braided tubing. See 5.4.5 to identify and document compressor run hours. Keep this information as it will be requested if service is required.

2. Disconnect the compressor wiring at the in-line 3 Pin Connector.

3. Remove exhaust Silencer Assembly for easier access.

4. Loosen (7) Screws (do not remove) holding the Inlet Duct. Slide and remove the Inlet Duct.

5. Remove (4) Nuts holding the Vibration Mounts to the chassis and carefully remove the Compressor.

6. Screw the (4) Vibration Mounts supplied into the threaded holes on the replacement Compressor.

7. Mount the Compressor onto the chassis and secure it into place using (4) nuts.

8. Reinstall the Inlet Duct and tighten the (7) screws.

9. Reconnect the 3 Pin Connector and braided tubing.

10. Reinstall the exhaust Silencer Assembly.

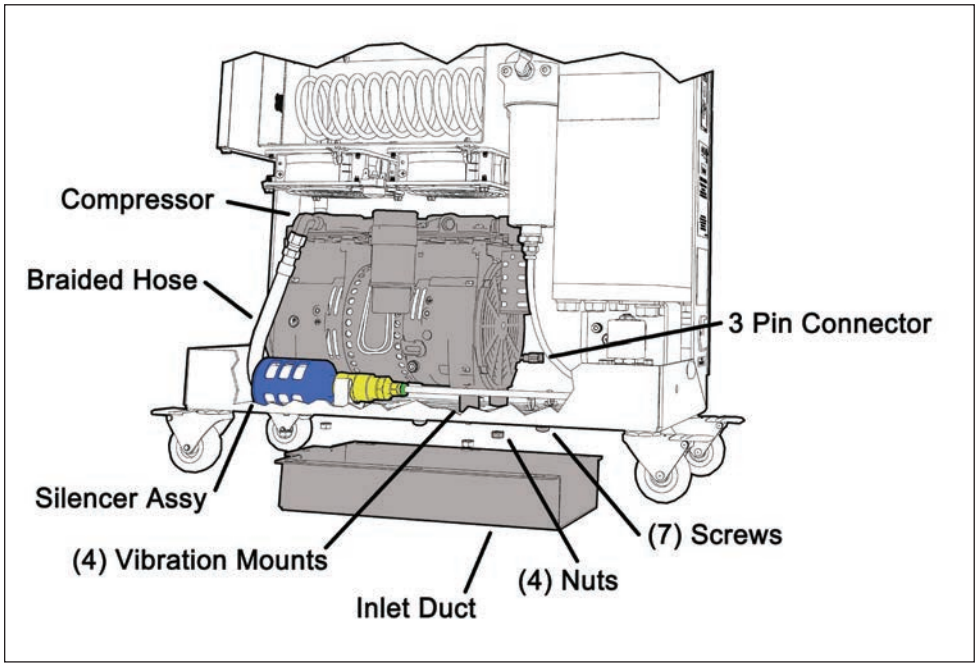

Figure 12: Compressor Replacement

5.4.4 Temperature Switch Reset

1. Disconnect power cable from receptacle.
2. Remove system cover.
3. Temperature switch is located, as shown.
4. Firmly press the red button to 'Reset'.

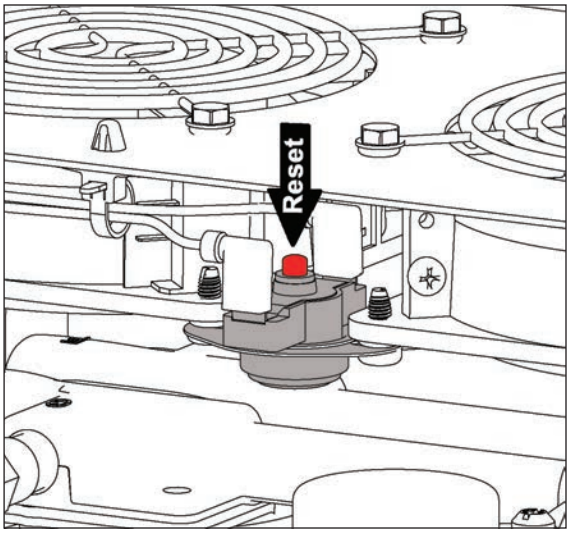

Figure 13: Temperature Switch Reset

5.4.5 PLC Display

1. Remove system cover.
2. PLC is located, as shown.
3. Press the green 'OK' button to illuminate back display. The system needs to be powered for this step.
4. The display will show:
   a. RUN hours –compressor run time, does not reset when the compressor is replaced
   b. ECO hours – time in the economy mode.

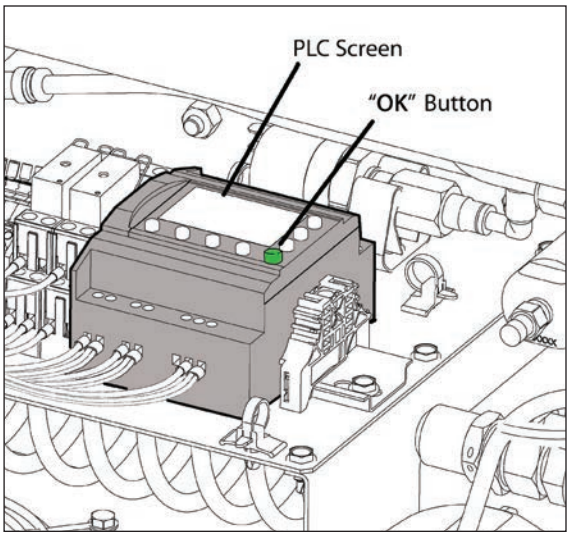

Figure 14: PLC Display

To perform any additional service or maintenance make sure to disconnect power cable from the power receptacle. Failure to do so may result in electrical shock or serious injury.

Parker Hannifin Corporation
Industrial Gas Filtration and
Generation Division
4087 Walden Ave.
Lancaster, NY
716-686-6400
www.parker.com/igfg

6 Troubleshooting

Symptom	Possible Cause	Corrective Action
Green power switch not illuminated	Power not connected	Connect power cord to unit receptacle and power source.
	Power switch not ON	Set power switch to ON.
	Blown fuse in receptacle	Replace 10-amp fuse on 120VAC units or 5-amp fuse on 230VAC unit.
	Incorrect input voltage	Check incoming voltage matches label voltage rating.
	Customer fuse/circuit breaker blown	Reset breaker and or replace fuse.
	Power switch failure	Verify power to unit, replace power switch.
Green power switch illuminated but no operation	Internal tanks are sufficiently pressurized. Unit is in standby mode until internal tank pressure drops	If green light is illuminated, then system is operating normally. System will resume operation when nitrogen gas demand increases.
	Internal over temperature switch has tripped	Check for obstructed inlet and outlet ducts. Remove cover and reset temperature switch. Service if required.
Red Indicator light ON	System pressure not up to approximately 75 psig on start up	System needs time (about 15-20 minutes) to build pressure internally before it can achieve > 75 psig on pressure gage.
	System pressure never gets above approximately 75 psig on start up	There is an external or internal leak. Check for leaks in tubing and fittings external to the unit first. If problem not solved, then disconnect unit from downstream tubing—after a 15-20 minutes system should go into standby mode. If it does not, then there is an internal leak, which requires service.
	System output pressure drops below approximately 75 psig during operation.	Nitrogen demand is too high or there is an external leak. Check for leaks in tubing and fittings.
	Internal over temperature switch has tripped	Check for obstructed inlet and outlet ducts. Remove cover and reset temperature switch, refer to section 5.4.4. Service if required.
Green indicator light ON but no operation	Internal tanks are sufficiently pressurized. Unit is in standby mode until internal tank pressure drops.	If green light is illuminated, then unit is operating normally. Unit will resume operation when nitrogen gas demand increases.
Green light OFF but pressure in green zone	Faulty pressure switch	Service required to replace or recalibrate pressure switch.
	Faulty relay	Service required to replace fault circuit relay.
	Faulty green light	Service required to replace light.
	Faulty relief Valve	Service required to replace valve.
Red light OFF but pressure below green zone	Faulty pressure switch	Service required to replace or recalibrate pressure switch.
	Faulty relay	Service required to replace fault circuit relay.
	Faulty red light	Service required to replace light.
No lights ON front	Power not connected	Connect power cord to unit receptacle and power source.
	Power switch not ON	Set power switch to ON.
	Blown fuse in receptacle	Replace 10-amp fuse on 120VAC units or 5-amp fuse on 230VAC unit.
	Incorrect input voltage	Check incoming voltage matches label voltage rating
	Customer fuse/ circuit breaker blown	Reset breaker and or replace fuse

7 Service Parts

Part No.	Description
B04-0647	REPL COMPRESSOR ASSY (100-120V)
B04-0648	REPL COMPRESSOR ASSY (230-240V)
B04-0664	REPL SOLENOID VALVE ASSY (110V)
B04-0665	REPL SOLENOID VALVE ASSY (230V)
A01-0502	SWITCH PRESSURE 25-100 PSIG
276262590	CONTROLLER
276260582	FAN 110V 60HZ
A03-0458	FAN 220V
A01-0496	PRESS GAUGE, 75-85PSI
A01-0497	PRESS GAUGE 0-698KPA
276201640	ON/OFF ROCKER SWITCH (GREEN)
10/A07-0034	SCREW COVER (PKG OF 10)
276262830	110VAC RELAY
A03-0440	RELAY 16A/230V
5/276260526	FUSE 10A 250V HBC (PKG OF 5)
5/A03-0193	FUSE 5A/250V GDC T (PKG OF 5)
A01-0501	HOSE BRAIDED 1/4 NPT
5/A03-0449	LAMP NEON RED 120V (PKG OF 5)
5/A03-0448	LAMP NEON GREEN 120V (PKG OF 5)
5/A03-0455	LIGHT NEON RED 220 VAC (PKG OF 5)
5/A03-0456	LIGHT NEON GREEN 220 VAC (PKG OF 5)
11131-1	PRESSURE REGULATOR
B04-0678	FITTING/TUBE KIT
4/B04-0644	CASTER (PKG OF 4)
B04-0680	REPL COVER

Parker Hannifin Corporation
Industrial Gas Filtration and
Generation Division
4087 Walden Ave.
Lancaster, NY
716-686-6400
www.parker.com/igfg

8 Schematics

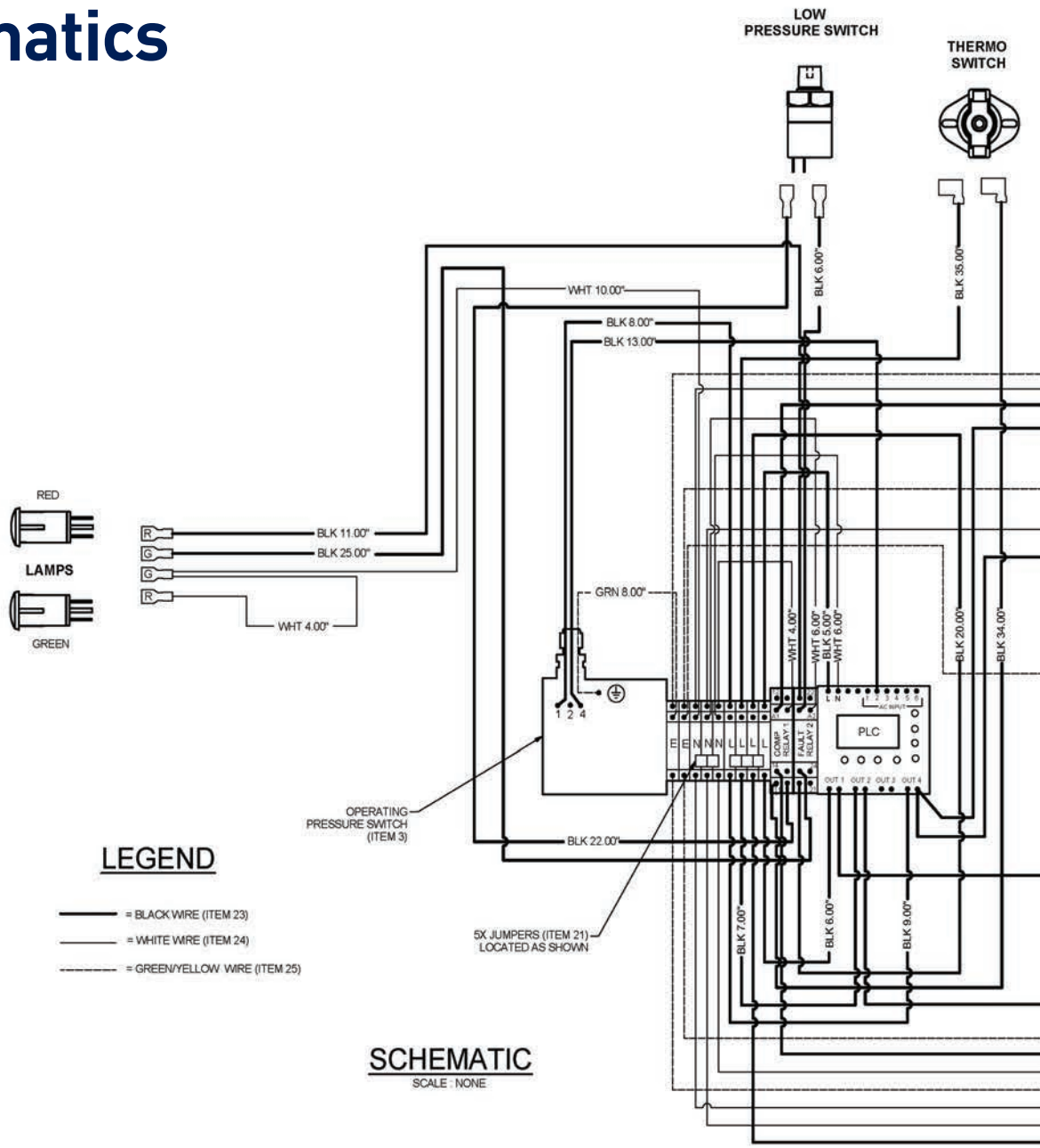

Parker Hannifin Corporation
Industrial Gas Filtration and
Generation Division
4087 Walden Ave.
Lancaster, NY
716-686-6400
www.parker.com/igfg

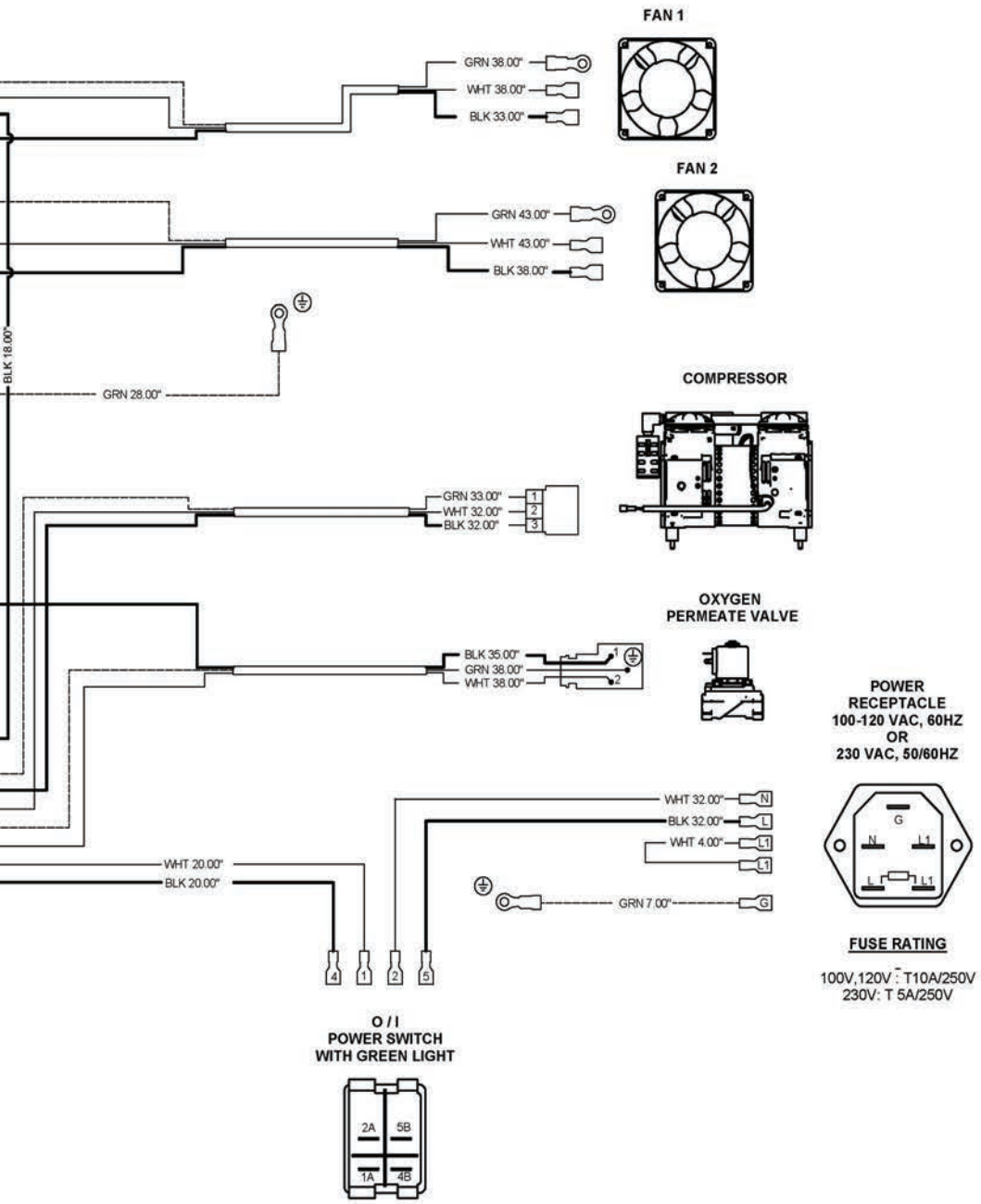

Parker Hannifin Corporation
Industrial Gas Filtration and
Generation Division
4087 Walden Ave.
Lancaster, NY
716-686-6400
www.parker.com/igfg

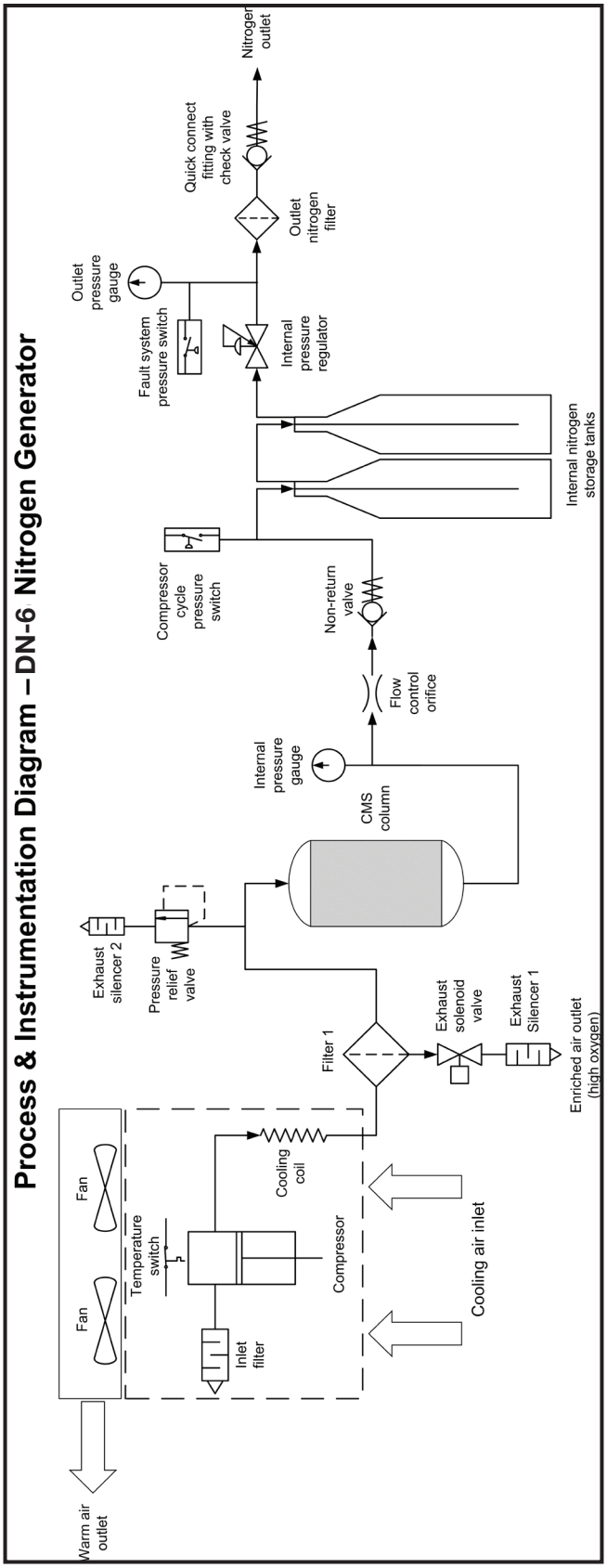

Parker Hannifin Corporation
Industrial Gas Filtration and
Generation Division
4087 Walden Ave.
Lancaster, NY
716-686-6400
www.parker.com/igfg

Product Warranty

Subject to the terms and conditions hereof, Parker Hannifin Corporation (PARKER) guarantees to the original purchaser of any Parker product (PRODUCT) installed and used as recommended by PARKER in normal service, that if the PRODUCT is verified by PARKER to be materially defective within 12 months from the date of installation or 18 months from date of shipment from Parker, of such PRODUCT, then PARKER, at PARKER'S sole option, will replace the PRODUCT with the same or equivalent PRODUCT, repair the PRODUCT, or refund the original purchase price for the PRODUCT. Such replacement, repair of payment by PARKER shall be in complete satisfaction of any and all liability of PARKER and its agents with respect to such PRODUCT. This warranty applies only to defects in material or workmanship and does not cover: ring and valve wear on compressors or routine maintenance items or filter cartridges. The aforementioned PRODUCT warranty covers replacement parts only and does not cover on-site labor. This warranty shall be void in case of: Any buyer's modifications not explicitly approved by PARKER; Misuse or failure to perform maintenance in accordance with PARKER recommendations; Use of unauthorized or non-genuine PARKER replacement parts; Contamination of the product with particles, solvents, oils, water, or other that are ingested into the air intake of the generator.

THE FOREGOING IS THE ONLY WARRANTY, GUARANTEE OR REPRESENTATION OF ANY KIND MADE WITH RESPECT TO ANY PARKER PRODUCT. NO IMPLIED WARRANTY, INCLUDING ANY IMPLIED WARRANTY OF MERCHANTABILITY OR FITNESS FOR A PARTICULAR PURPOSE, APPLIES TO THE PRODUCT AFTER THE WARRANTY PERIOD STATED ABOVE, AND NO OTHER EXPRESS WARRANTY OR GUARANTY, EXCEPT AS MENTIONED ABOVE, GIVEN BY ANY PERSON, FIRM OR CORPORATION WITH RESPECT TO THE PRODUCT SHALL BIND PARKER. PARKER SHALL NOT BE LIABLE FOR LOSS OF REVENUES OR PROFITS, EXPENSE FOR SUBSTITUTE EQUIPMENT OR SERVICE, STORAGE CHARGES, OR ANY OTHER SPECIAL, INCIDENTAL OR CONSEQUENTIAL DAMAGES CAUSED BY THE USE, MISUSE OR INABILITY TO USE THE PRODUCT REGARDLESS OF THE LEGAL THEORY ON WHICH THE CLAIM IS BASED, AND EVEN IF PARKER HAS BEEN ADVISED OF THE POSSIBILITY OF SUCH DAMAGES. NOR SHALL RECOVERY OF ANY KIND AGAINST PARKER BE GREATER IN AMOUNT THAN THE PURCHASE PRICE OF THE PRODUCT SOLD BY PARKER AND CAUSING THE ALLEGED DAMAGE. WITHOUT LIMITING THE FOREGOING, YOU ASSUME ALL RISK AND LIABILITY FOR LOSS, DAMAGE OR INJURY TO YOU AND YOUR PROPERTY AND TO OTHERS AND THEIR PROPERTY ARISING OUT OF USE, MISUSE OR INABILITY TO USE THE PRODUCT NOT CAUSED DIRECTLY BY THE NEGLIGENCE OF PARKER. THIS LIMITED WARRANTY IS GIVEN ONLY WITH RESPECT TO A PRODUCT PURCHASED FROM PARKER OR AN AUTHORIZED PARKER DISTRIBUTOR.

Parker Hannifin Corporation
Industrial Gas Filtration and
Generation Division
4087 Walden Ave.
Lancaster, NY
716-686-6400
www.parker.com/igfg

Publication: MAN_PKR_Nitrogen-Generator-DN6_Rev1_072019

Parker Hannifin Corporation
Industrial Gas Filtration and Generation Division
4087 Walden Avenue
Lancaster, New York 14086
phone 716 686 6400 or 800 343 4048
www.parker.com/igfg